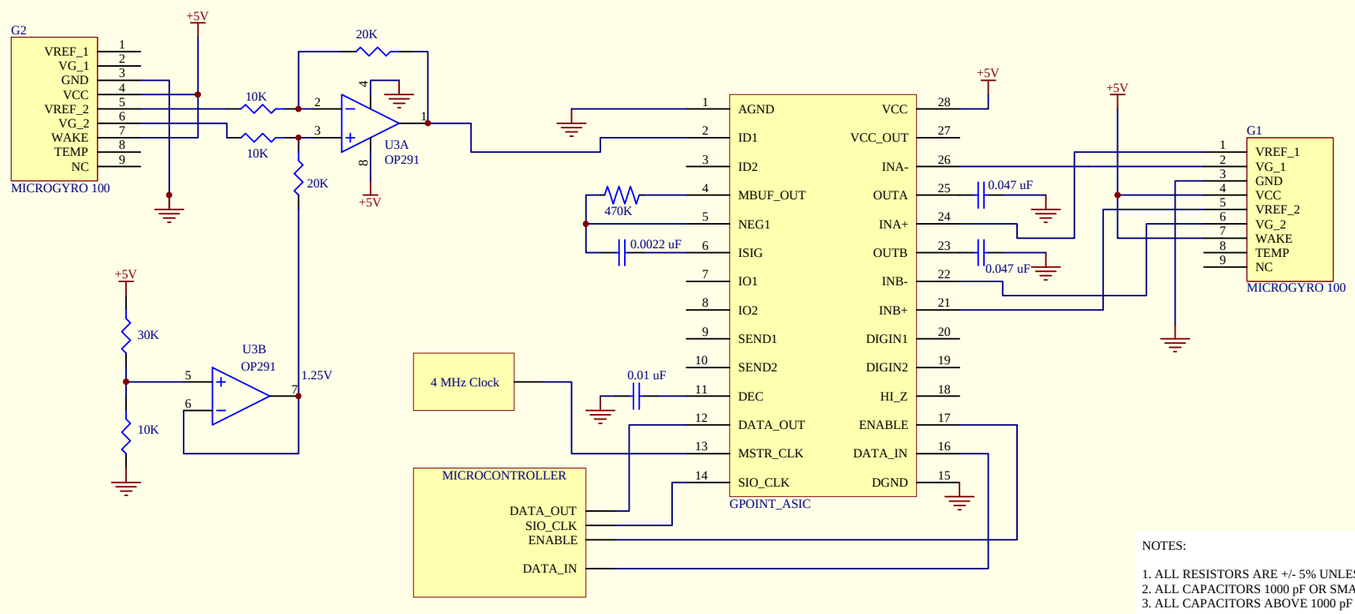

NOTES:

1. ALL RESISTORS ARE +/- 5% UNLESS OTHERWISE SPECIFIED.
2. ALL CAPACITORS 1000 pF OR SMALLER ARE +/- 10% NPO UNLESS OTHERWISE SPECIFIED.
3. ALL CAPACITORS ABOVE 1000 pF ARE +/- 10% X7R UNLESS OTHERWISE SPECIFIED.

Title: MG100 for 3 axis rate measurements			Gyration, Inc. 12930 Saratoga Ave. Bldg. C Saratoga, CA 95070 USA
Size: **B**	Number:	Rev:	Drawn by:
File:		Date: 20-Sep-1999	Sheet 1 of 1

Gyration